BOBRICK

Technical Data

RECESSED PAPER TOWEL DISPENSER

B-35903

Specify Finish Required

☐ Stainless Steel, Satin Finish
☐ Matte Black Finish, please use model no. B-35903.MBLK



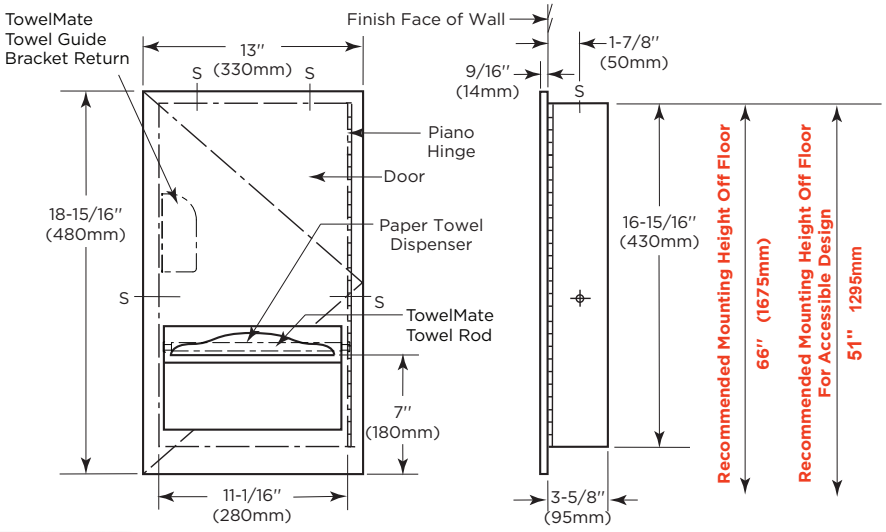

Rough Wall Opening

11-1/2" (290mm) wide
17-1/4" (440mm) high
3-3/4" (95mm) minimum recessed depth

Distributed by
www.AmeraProducts.com
Phone: (800) 608-6568
Fax: (409) 840-5545
info@ameraproducts.com

ADA/CBC Installation Guidance

***Operable Part:** Top of paper towel dispenser opening

Maximum mounting height of Operable Part:
ADA/ICC: 48" above finished floor (AFF)
CBC: 40" above finished floor (AFF)

*For more information regarding operable parts, please refer to Bobrick Planning Guide for Accessible Restrooms, page 9.

MATERIALS:

Cabinet — 18-8, type-304, heavy-gauge stainless steel. All-welded construction. Exposed surfaces have satin finish or matte black, as specified.

Door — 18-8, type-304, 18-gauge (1.2mm) stainless steel. 9/16" (14mm) 90° return edges for maximum rigidity. Secured to cabinet with a concealed, full-length stainless steel piano-hinge. Equipped with a stainless steel cable door-swing limiter and friction catch.

Paper Towel Dispenser — 18-8, type-304, 22-gauge (0.8mm) stainless steel. Capacity: 300 C-fold or 400 multifold paper towels. TowelMate consisting of a 90° return towel guide angle inside cabinet to prevent paper towels from falling forward out when door is opened for servicing

TowelMate® Towel Rod Assembly — Consisting of a round Nylon Rod and (2) stainless steel Rod Screws for attachment, is field replaceable. Stainless steel Stop Screws (2) lock TowelMate Rod assembly in place. To retrofit TowelMate into existing installed units manufactured prior to Feb. 2021, order TowelMate Accessory Bobrick Model No. 369-130.

OPERATION:

Paper towel dispenser accommodates C-fold and multifold paper towels without adjustment or use of adapters. Door-swing limiter prevent damage to washroom accessories and walls.

INSTALLATION:

Provide framed rough wall opening 11-1/2" wide x 17-1/4" high (290 x 440mm). Minimum recessed depth required from finish face of wall is 3-3/4" (95mm). Allow clearance for construction features that may protrude into rough wall opening from opposite wall. Coordinate with mechanical engineer to avoid pipes, vents, and conduits in wall. Mount cabinet with shims between framing and cabinet at all points indicated by an *S*, then secure unit with sheet-metal screws furnished by manufacturer.

SPECIFICATION:

Recessed paper towel dispenser shall be type-304 stainless steel with all-welded construction; exposed surfaces shall have satin finish or matte black, as specified. Unit equipped with TowelMate consisting of a 90° return towel guide angle inside cabinet to prevent paper towels from falling forward out when door is opened for servicing and a Nylon Rod across the center of the towel tray to dispense paper towels one at a time Door shall be 18 gauge (1.2mm); have 9/16" (14mm) 90° return edges; be secured to cabinet with a concealed, full-length stainless steel piano-hinge; and equipped with a stainless steel cable door-swing limiter and friction catch. Paper towel dispenser shall be able to dispense 300 C-fold or 400 multifold paper towels without adjustment or adapters

Recessed Paper Towel Dispenser shall be Model B-35903 of Bobrick Washroom Equipment, Inc.,

The illustrations and descriptions herein are applicable to production as of the date of this Technical Data Sheet.
The manufacturer reserves the right to, and does from time to time, make changes and improvements in designs and dimensions.

Revised 6/28/23

© 2023 by Bobrick Washroom Equipment, Inc.